SECTION 8
HANDLING AND SERVICING

TABLE OF CONTENTS

	Page
TOWING	8–1
TAXIING	8–1
PARKING	8–1
MOORING	8–1
SERVICING	8–2

LIST OF ILLUSTRATION

	Page
Figure 8-1. Towing.	8–3
Figure 8-2. Taxiing.	8–4
Figure 8-3. Parking.	8–5
Figure 8-4. Protective covers.	8–6
Figure 8-5. Mooring.	8–7
Figure 8-6 (sheet 1 of 2). Servicing.	8–8
Figure 8-6 (sheet 2 of 2). Servicing.	8–9

FOR TRAINING ONLY

FOR TRAINING ONLY

SECTION 8
HANDLING AND SERVICING

TOWING
(Figure 8-1)

The helicopter can be manoeuvered on the ground manually, or by a suitable vehicle, using the towing bar which can be secured to the nose wheel bar. The wheel can be steered 40° each side from the center.

TAXIING
(Figure 8-2)

The taxiing can only be performed by qualified pilots, but assistance from ground crew may be necessary when taxiing in obstructed areas.

PARKING
(Figure 8-3)

Park the helicopter in desired parking area on a level surface, when possible. Attach static ground wire and check that all switches are in OFF or neutral position. Install the approved straps and covers, as required.
For extended parking, disconnect the battery, engage rotor brake, lock main landing gear wheels, center and lock nose wheel, close all access doors and panels and install protective covers as shown on figure 8-4.

MOORING
(Figure 8-5)

The helicopter can be moored on a paved ramp, if available, with suitably spaced tie-down rings, and headed in direction from which forecast wind is expected.

FOR TRAINING ONLY

CAUTION

If forecast wind velocity exceeds 60 Kts, moor helicopter in a sheltered area, or place it in a hangar.

If suitable paved ramp and tie-down rings are not available, park helicopter on an appropriate parking area, headed into wind and use appropriate mooring anchors or make ″dead man″ anchors.
Engage rotor brake, lock main landing gear wheels, center and lock nose wheel, close all access doors and panels. Remove from parking area all loose equipment that can be lifted by wind.

SERVICING

Refer to Figure 8-6.

FOR TRAINING ONLY

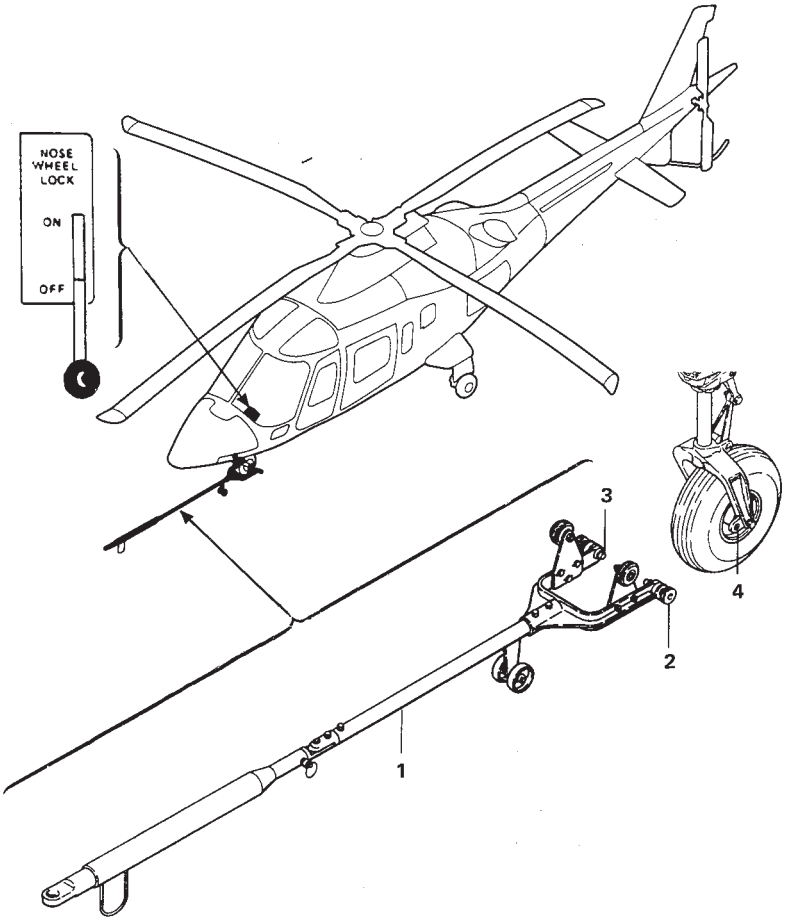

ABHD207A

1. Tow bar
2. Pin grip (two)
3. Pin (two)
4. Pin hole (two)

Figure 8-1. Towing.

FOR TRAINING ONLY

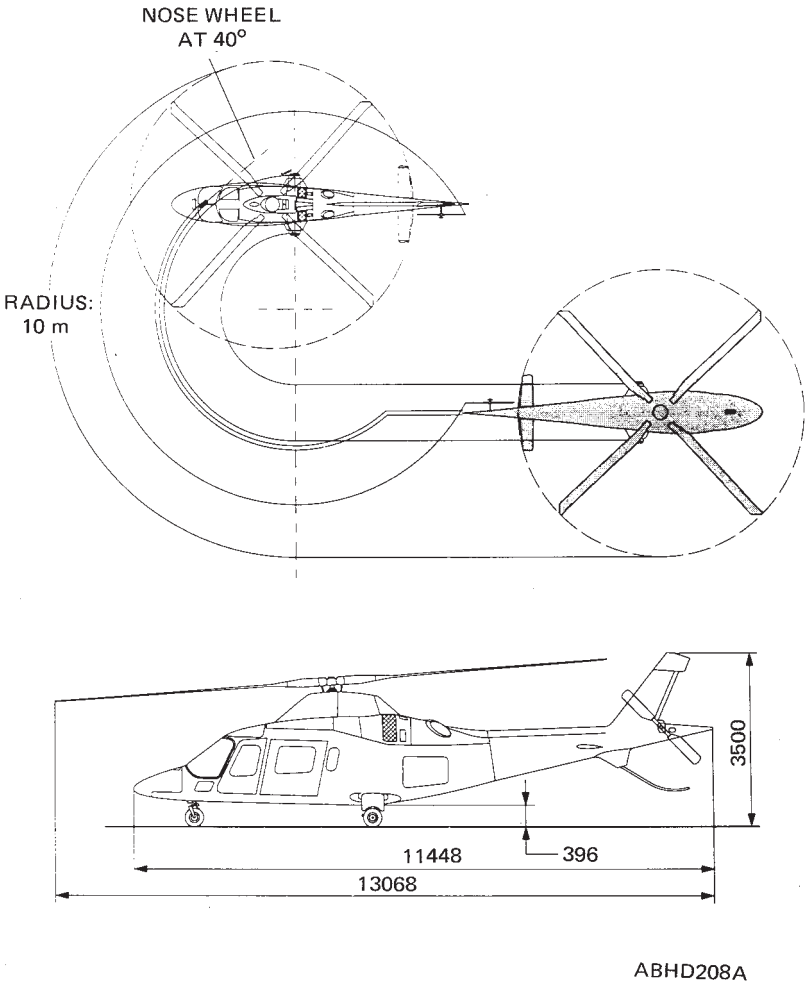

Figure 8-2. Taxiing.

FOR TRAINING ONLY

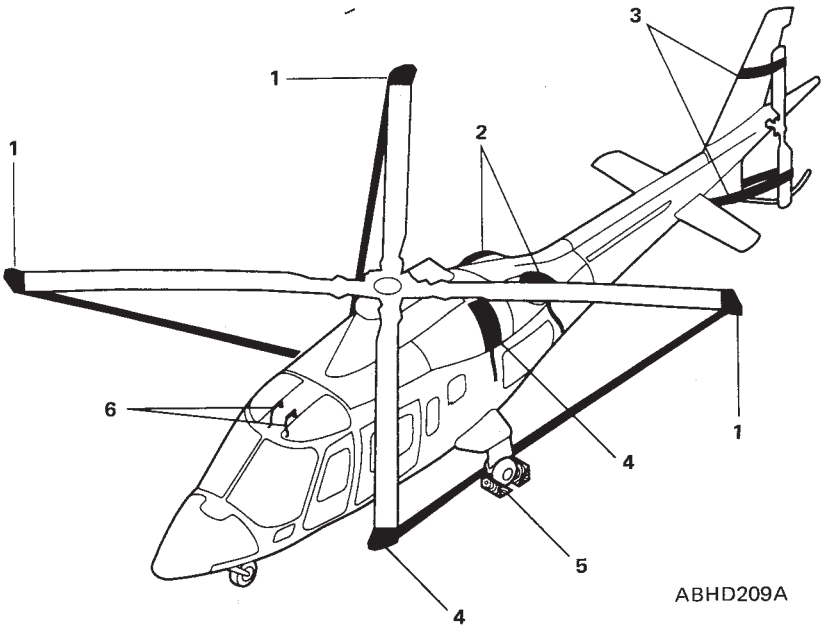

1. Main rotor blade straps
2. Engine exhaust duct covers
3. Tail rotor blade straps
4. Left engine air intake cover
   (Typical for right engine air intake cover)
5. Wheel chocks
6. Pitot tube covers

Figure 8-3. Parking.

FOR TRAINING ONLY

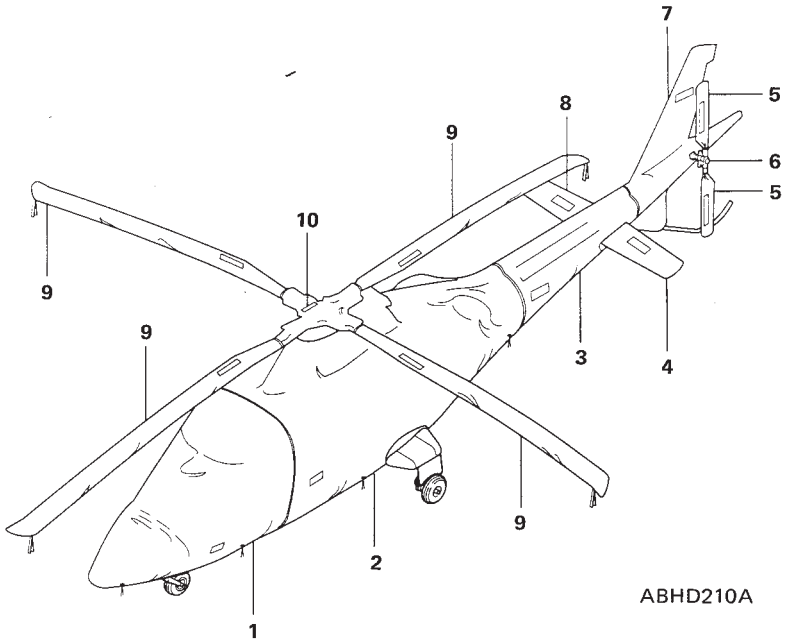

1. Fuselage nose section cover
2. Fuselage rear section cover
3. Tail boom cover
4. Left elevator cover
5. Tail rotor blade cover (two)
6. Tail rotor hub cover
7. Vertical empennage cover
8. Right elevator cover
9. Main rotor blade cover (four)
10. Main rotor hub cover

Figure 8-4. Protective covers.

FOR TRAINING ONLY

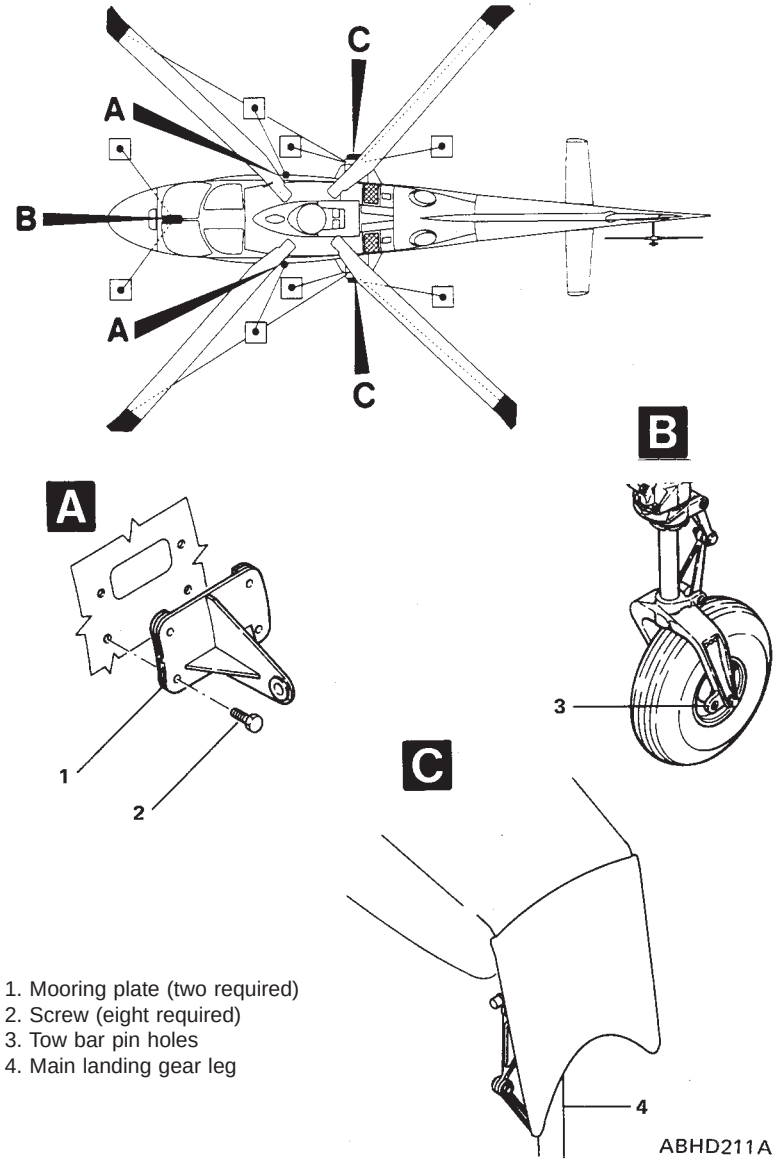

1. Mooring plate (two required)
2. Screw (eight required)
3. Tow bar pin holes
4. Main landing gear leg

Figure 8-5. Mooring.

FOR TRAINING ONLY

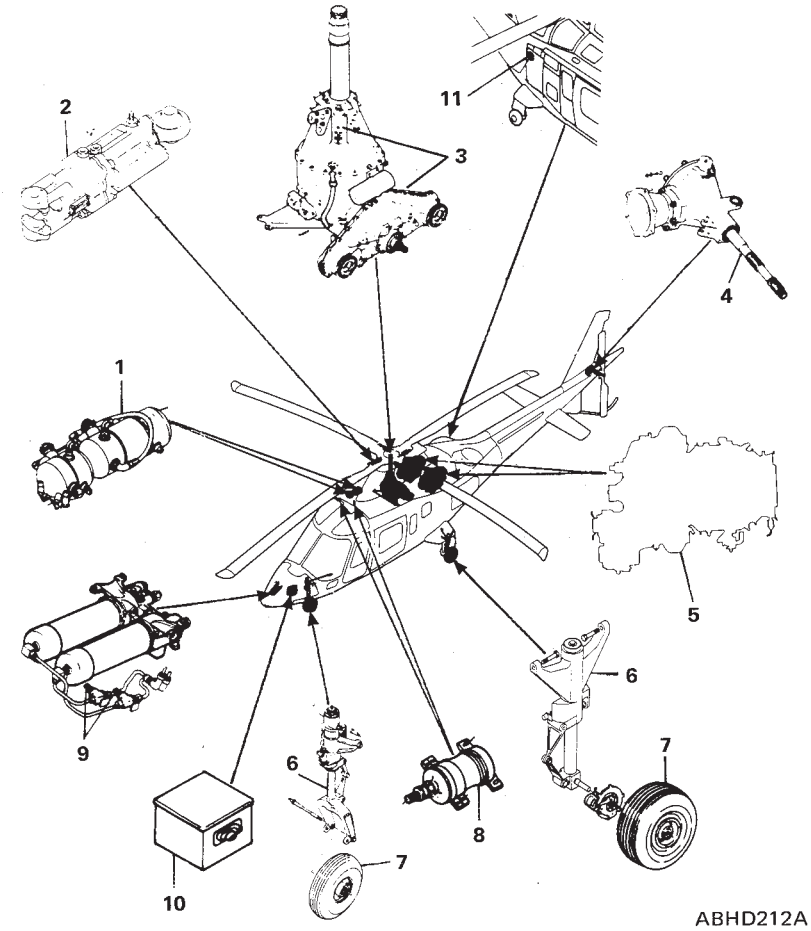

1. Flight control hydraulic system reservor (two)
2. Main rotor damper (four)
3. Main transmission
4. 90-degree gearbox
5. Engine (two)
6. Landing gear shock strut (three)
7. Landing gear wheel tires (three)
8. Flight control hydraulic system accumulators (two)
9. Utility hydraulic system accumulators (two)
10. Battery
11. Fuel filler point

Figure 8-6 (sheet 1 of 2). Servicing.

FOR TRAINING ONLY

N°	ITEM	CAPACITY (liter)	NOTE
1	Hydraulic system	1.6	**N° 1 system**
1	Hydraulic system	3	N° 2 system
2	Dampers	0.05	Each damper
3	Main transmission	11	
4	90° gearbox	0.24	
5	Engine oil system	5.12	Each system
6	Landing gear strut		Nitrogen. Main LG: 188.5 psi Nose LG: 100 psi
7	Landing gear tires		
8	Flight controls accumulators		Nitrogen
9	Accumulators (utility hydraulic system)		Nitrogen. Charge to 427 psi
10	Battery		Distilled water. Add as necessary.
11	Fuel system	605	Usable: 595 liters

For fuel and oil Specification refer to Section 1 of this manual.

Figure 8-6 (sheet 2 of 2). Servicing.

FOR TRAINING ONLY

FOR TRAINING ONLY